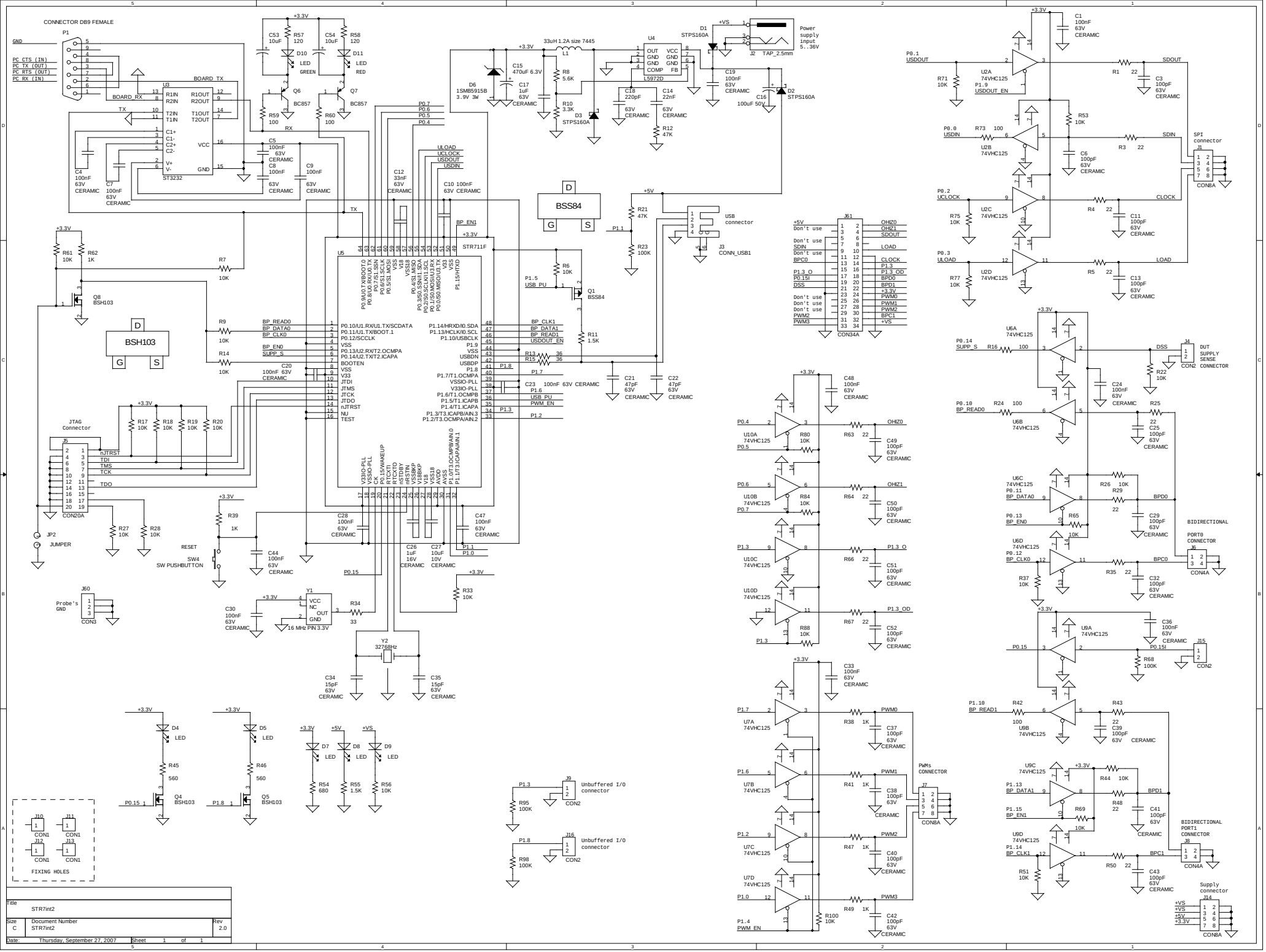

Title	STR7int2		
Size C	Document Number STR7int2		Rev 2.0
Date: Thursday, September 27, 2007	Sheet 1 of 1		