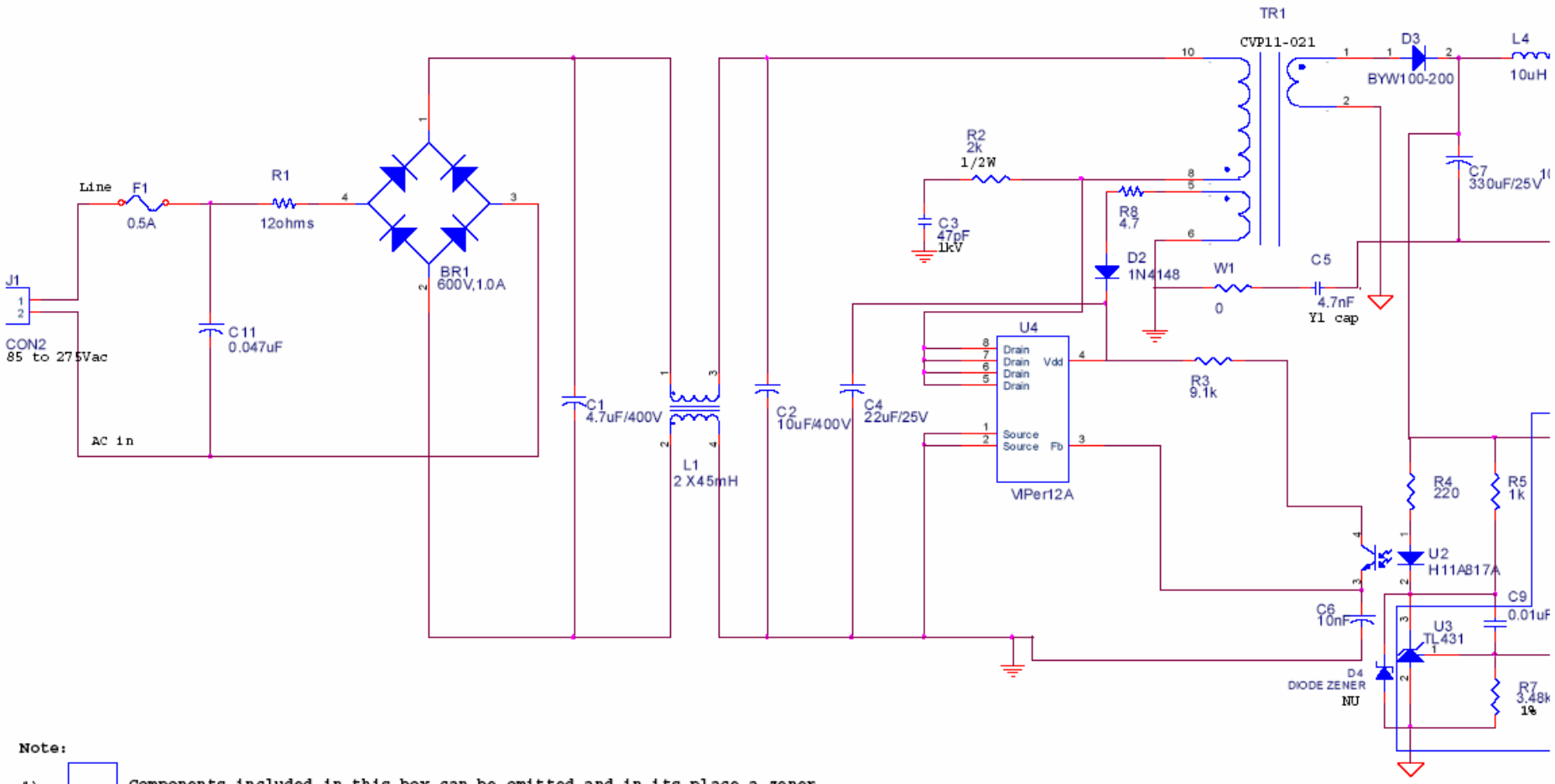

Note:

1) Components included in this box can be omitted and in its place a zener diode, D4 can be used for a cost reduced design