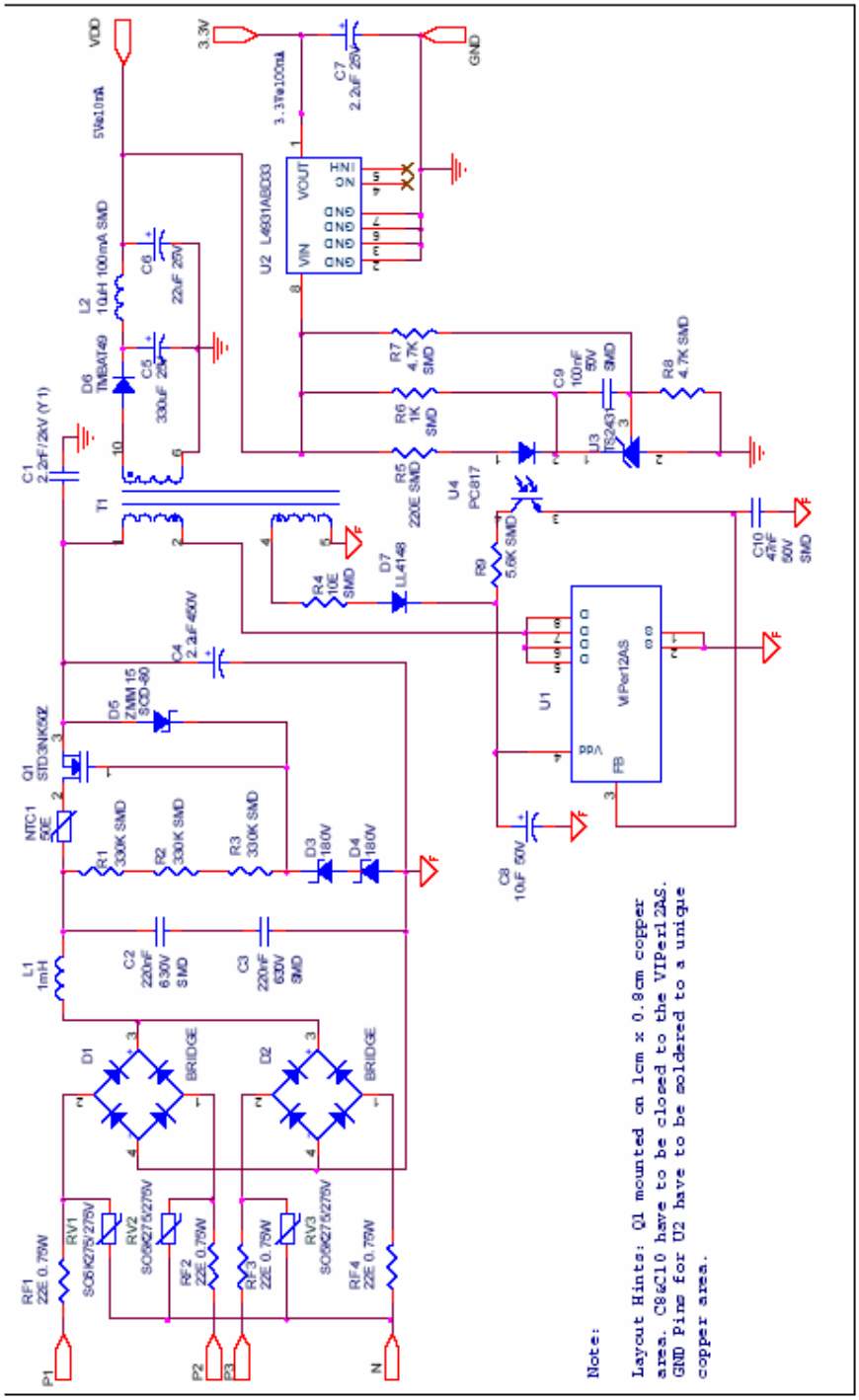STEVAL-ISA012V1 Schematic