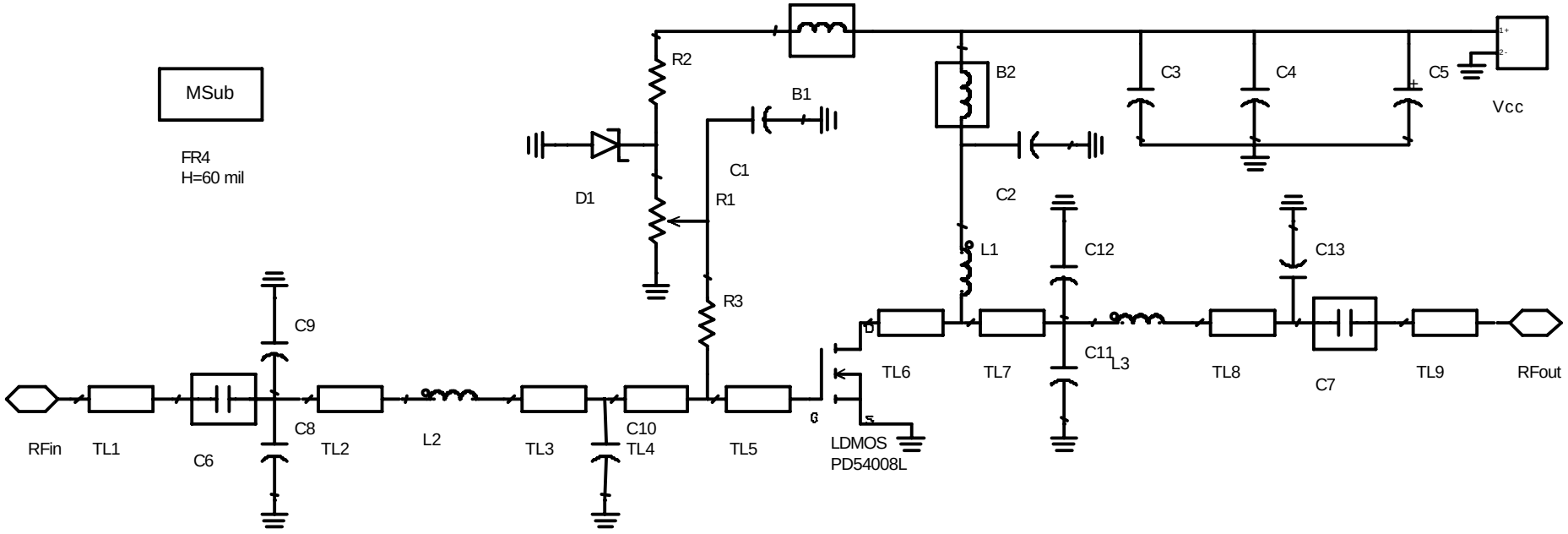DB-54008L-406 schematic