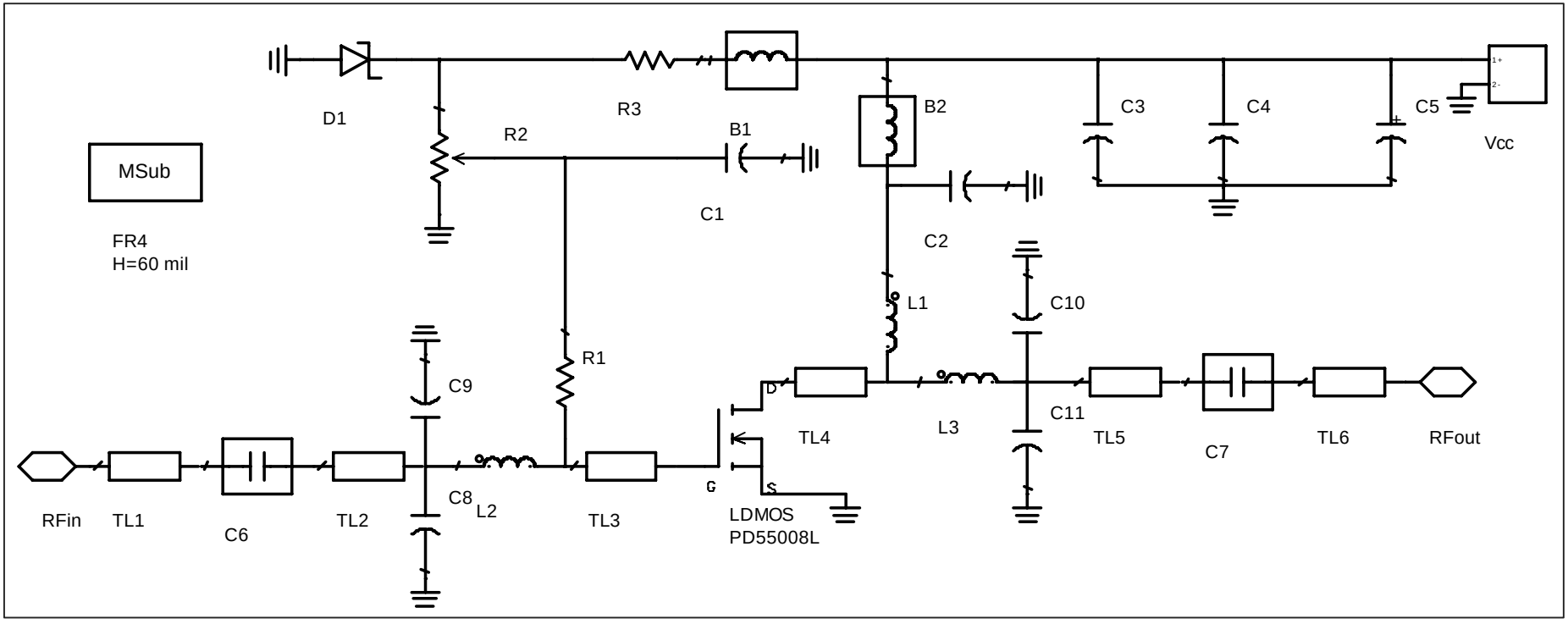DB-55008L-175 schematic